# Paramount Quarters by Another Project



ANOTHER
Project

Furniture & Lighting

47 Normanby Road
Mt Eden
Auckland 1024
Ph +64 9 377 5556

simonjames.co.nz

# ANOTHER Project

The Paramount Quarters is an enclosed seating arrangement that offers a semi-private meeting space in an open plan working environment. With multiple size options, the Paramount Quarters can accommodate 2 - 8 people depending on the configuration. This system comes with an optional built-in table with Oak veneer top and optional intergrated softwiring

Cross Section

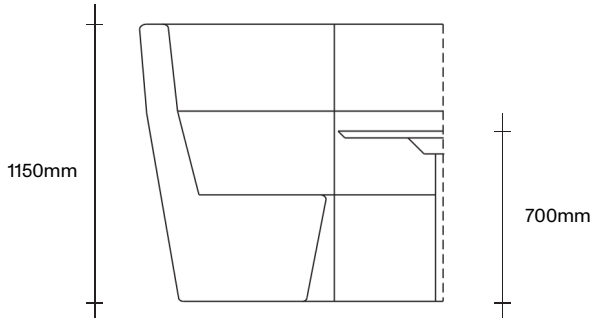






Paramount Quarters

# SIMON JAMES

Two Seater

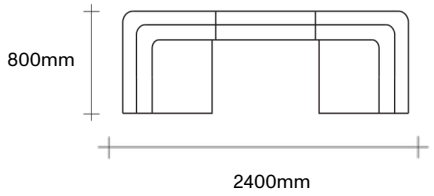


Four Seater

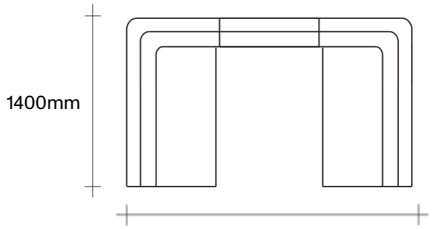


Four Seater with Arms and Table

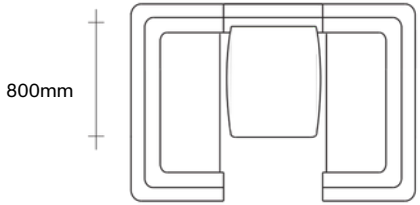


Two Seater with Table

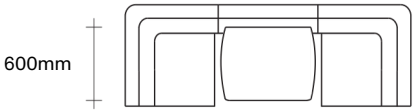


Four Seater

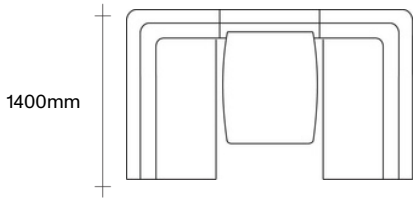


Two Seater with Arms

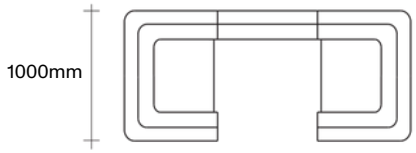


Four Seater with Arms

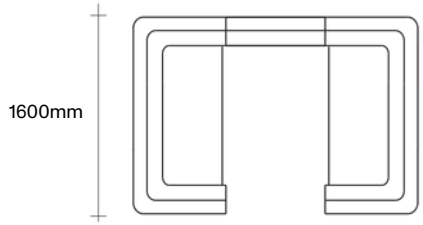

Paramount Quarters

# SIMON JAMES

Six Seater

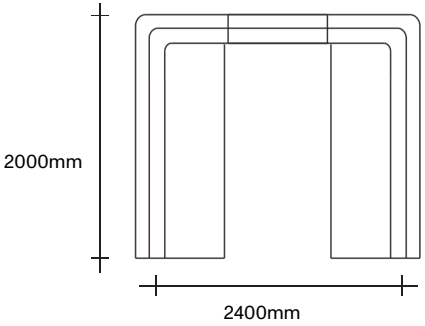


Six Seater with Arms

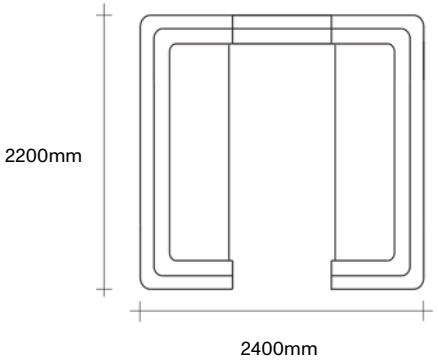


Six Seater with Arms and Table

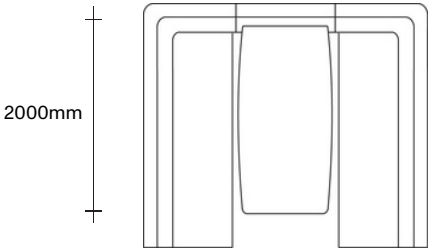


Six Seater with Arms and Table

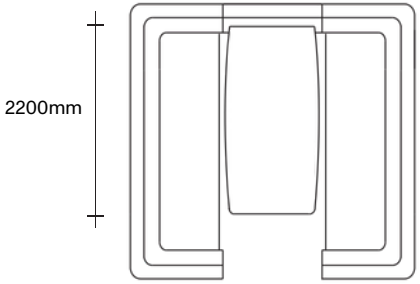



# ANOTHER Project

Furniture & Lighting

47 Normanby Road
Mt Eden
Auckland 1024
Ph +64 9 377 5556

simonjames.co.nz